STAND ALONE CHROMAKEY SOLUTION

datavideo®

AFFORDABLE CHROMAKEY

DVK-200

The Datavideo DVK-200 is an easy to use stand alone chromakey solution enabling you to create stunning virtual studio effects without the need for complicated computer software.

With the DVK-200 you can connect a range of video and computer equipment, including DVI, Y:U:V, S-Video (Y/C) and Composite Video, keying with either blue, green, white or black backgrounds. Backgrounds sources can be either S-Video (Y/C) or Composite Video.

Together with Datavideo's CKL-200, dual colour (green & blue) LED lighting ring and retro-reflective backdrop cloth (see page 39), the DVK-200 is the perfect partner for keying the easy way.

Ideal use for applications within education, small studios, wedding videographers and many others.

FEATURES

- Choice of Blue, Green or Luminance keying.
- Advanced key adjustments, for perfect keying.
- Video inputs from; Y:U:V / DVI-I / S-Video or Composite Video.
- Background inputs from; S-Video or Composite Video.
- Window size adjustment - remove unwanted items from the foreground image.
- Built in colour processor for adjustment of, brightness, contrast, colour and tint (tint is NTSC only)
- RS-232 control interface for easy integration.

REAR VIEW

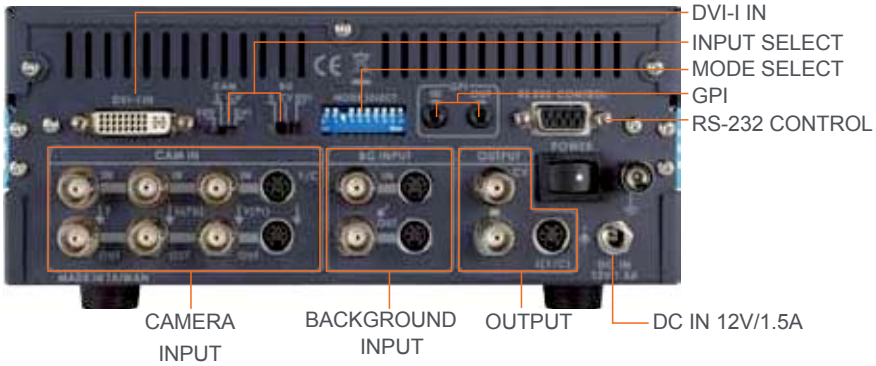

APPLICATIONS

News & Weather Forecast

Shopping & community channel

Wedding & Event

Entertainment

FEATURES

Window Size

The window size can be set to remove any unwanted items from the foreground image. Often your backdrop does not fill the whole screen, particularly if you want your subject to appear small in the finished image. You can use the Up / Down / Left / Right arrows to make the keying window smaller so that only your backdrop is being keyed.

Blue or Green Keying

Chromakey over Blue or Green, or Lumakey via either Black or White backgrounds making it very easy to use in any application.

Edge Shrink Functions.

Even with perfect lighting, and key density, you will occasionally have a talent or subject with a dark edge. Using the DVK-200's easy to use left & right edge shrink functions can remove the unwanted dark edge.

DVI-I INPUT.

The advanced connection options include DVI-I making it easy to connect to computer equipment.

Spill Adjustment

The final touch when using Chromakey is the adjusting the spill. Often, the green / blue backdrop can cast an unwanted colour cast on the subject. DVK-200 features an advanced spill adjustment enabling you to remove this unwanted cast.

Settings Lock

Once you have set all the parameters of the DVK-200 to produce the perfect effect you can lock the settings. Once locked none of the DVK-200 front panel controls will respond.

BEFORE LOCK AFTER LOCK

Subject density adjustment will make your subject more or less opaque / transparent enabling a perfect defined effect

SETUP EXAMPLE

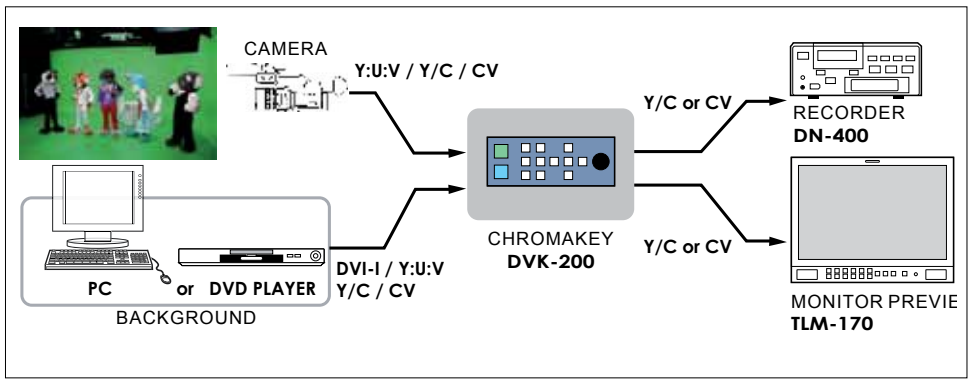

SPECIFICATION

- Video Input:
  Foreground Input: DVI-I, Component Y:U:V, S-Video (Y/C) or Composite Video.
  Background Input: S-Video (Y/C) or Composite Video
- Video Output: S-Video (Y/C) or Composite Video
- Video system: PAL/ NTSC support. NTSC supports 0 IRE or 7.5 IRE.
- Key Out background color selectable: Green, Blue or Luminance
- Others: GPI on RS-232 control can setup Green/ Blue Lumakey feature.
- Power: DC 12V/ 1.5A
- Dimensions: 210mm x 91mm x 220mm
- Weight: 2.1Kg